RTE200 CANopen

ROTARY ENCODER

Absolute single turn magnetic encoder without shaft

Top Sensors Manufacture

L.4 - DS0035 R00 RTE200 CANopen

CHARACTERISTICS

- Measuring range 0° to 360°
- Redundant sensors
- Compact size
- Linearity up to ±0.5°
- High protection level and wide temperature range
- Anodized aluminum housing

ADVANTAGES

- Hall effect technology
- Reliability and long service life
- Excellent accuracy
- Several connections type available
- Highly configurable via CANopen
- Firmware upgradable via proprietary bootloader

IP67 — High protection level

Shock/vibration resistant

Redundant outputs

Reverse polarity protection

-40...+85 °C — Wide temp. range

CANopen output

CANopen Safety

SAE J1939 output

High accuracy

Firmware Upgradable

Directive 2011/65/EU

EU conformity

TSM SENSORS S.R.L. Registered office:Via Roma 110, 24021 Albino (BG) - ITALY
Operational Headquarter : Via Alcide De Gasperi , 6/8 25030 Zocco d'Erbusco (BS) - ITALY
P.IVA: 04334290162 - C.F: 03757080985 TEL. +39 030 7001376 - info@tsmsensors.com - www.tsmsensors.com

RTE200 CANopen

ROTARY ENCODER

Absolute single turn magnetic encoder without shaft

PRODUCT DESCRIPTION

RTE200 is a contact-less, magnetic, absolute encoder series featuring high operation speed, intented for harsh environments applications such as high automation and process control.

The contactless technology together with the anodized aluminum housing make this sensor a very robust device with expected life practically infinite thanks to the absence of wear on the sensing element.

Excellent accuracy, high IP rating, shock and vibration resistance and electromagnetic immunity makes this transducer suitable for mobile hydraulic applications such as: agricultural vehicles, earth moving machines, construction equipment, articulated arm cranes and aerial work platforms.

Agricultural machinery

Construction

Earth moving

Handling and **lifting**

L.4 - DS0035 R00 RTE200 CANopen

TSM SENSORS S.R.L. Registered office:Via Roma 110, 24021 Albino (BG) - ITALY
Operational Headquarter : Via Alcide De Gasperi , 6/8 25030 Zocco d'Erbusco (BS) - ITALY
P.IVA: 04334290162 - C.F: 03757080985 TEL. +39 030 7001376 - info@tsmsensors.com - www.tsmsensors.com

RTE200 CANopen

ROTARY ENCODER

Absolute single turn magnetic encoder without shaft

Top Sensors Manufacture

PRODUCT CODE

ORDER CODE[1] ▶ R T E 2 0 0 . _ (a) . _ (b) . _ _ _ (c) . _ _ (d) . _ _ (e) . _ (f) . _ (g) . _ (h)

a Counting direction

- **1** = CH1 & CH2 = CW
- **2** = CH1 & CH2 = CCW
- **3** = CH1 = CW, CH2 = CCW
- **4** = CH1 = CCW, CH2 = CW

b Power supply range

- **2** = 9 ... 30 V DC
- **6** = 8 ... 36 V DC

c Measurement range

- **360** = 360°

d Output type[2]

- **6** = CANopen
- **28** = CANopen with diagnostics
- **40** = SAE J1939
- **43** = CANopen safety

e Connections

- **1** = Male connector M12x5, PUR cable 30cm
- **4** = Wire connector 5x0.25mm² PUR cable 30cm
- **13** = Overmolded Deutsch DT04-6P, PUR cable 30cm
- **20** = Overmolded Deutsch DT04-4P, PUR cable 30cm
- **30** = Molex Micro-Fit 6 poles (cod. 43025-0600) with PUR cable 30cm
- **31** = Male connector M8x5 molded 90°, PUR cable 15cm code B
- **39** = PUR cable 60cm with DT04-6P connector to be assembly[3]

f Type of magnet

- **1** = Rotor STD
- **2** = Screw Magnet "M8, SW13"
- **3** = Magnet 10 x 2 mm
- **4** = Screw Magnet "M7, SW11"

g Customization

- **X** = None
- **?** = Customization code

h Approvals

- **1** = Standard components[4]
- **2** = SIL2/PLd

(1) Not all combinations can be ordered. Please contact TSM for confirmation before placing an order.
(2) Redundanted primary measures, acquired by a single logical unit and published on the CANOpen output by one or more PDOs, according to the selected mapping.
(3) The cable is supplied with all the connector pins crimped on the wires but with the housing to be mounted separately after installation
(4) MTTFd > 100 years (EN ISO 13849-1) a) b)
a) Standard component. It does not constitute a safety component as defined in the Machinery Directive 2006/42/CE.
b) Every second failure of an electronic component is regarded as a dangerous failure.

TSM SENSORS S.R.L. Registered office:Via Roma 110, 24021 Albino (BG) - ITALY
Operational Headquarter : Via Alcide De Gasperi , 6/8 25030 Zocco d'Erbusco (BS) - ITALY
P.IVA: 04334290162 - C.F: 03757080985 TEL. +39 030 7001376 - info@tsmsensors.com - www.tsmsensors.com

RTE200 CANopen

ROTARY ENCODER

Absolute single turn magnetic encoder without shaft

TECHNICAL SPECIFICATION

Measuring range	0 ... 360°
Resolution	Default: 0.01° Selectable: 0.01° - 0.1° - 1°
Linearity (Ta = 25°C)	±0.5°
Housing	Anodized aluminum
Protection class	IP67 (acc. to EN 60529)
Temperature drift	±0.01 °/°C typ.
Temperature range	-40°C ... +85°C
Weight approx.	110 g
Shock resistance	acc. to EN 60068-2-27 50 G, 11 ms, 100 shocks per axis Axis : X, Y, Z
Vibration resistance	acc. to EN 60068-2-6 10 ... 500 Hz, 10g, 2h per axis Axis : X, Y, Z

ELECTRICAL CHARACTERISTICS

Power supply range	See order code
Consumption typ.	36 mA (12 VDC, w/o load) 18 mA (24 VDC, w/o load)
Startup time	< 1.5 s
Interface	See order code
CANopen profile conformity	CiA DS301
Electromagnetic compatibility	acc. to EN 61326-1, EN 61326-3-1
EU Conformity	EMC directive 2014/30/EU RoHS directive 2011/65/EU + 2015/863/EU

OPERATING PRINCIPLE

Hall effect

Bases its operation principle on the generation of a voltage across an electrical conductor when a magnetic field is applied in a direction perpendicular to the current flow. An hall-effect rotary sensor gives the absolute angular position of a small rotating dipole magnet above the device surface (end of shaft magnet).

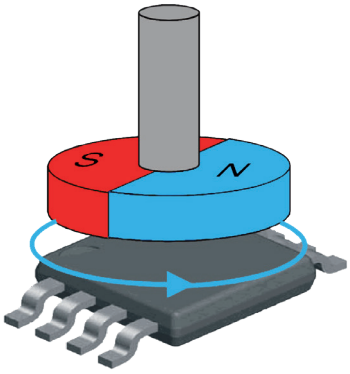

TSM SENSORS S.R.L. Registered office:Via Roma 110, 24021 Albino (BG) - ITALY
Operational Headquarter : Via Alcide De Gasperi , 6/8 25030 Zocco d'Erbusco (BS) - ITALY
P.IVA: 04334290162 - C.F: 03757080985 TEL. +39 030 7001376 - info@tsmsensors.com - www.tsmsensors.com

1] ELECTRICAL CONNECTION M12 X 5 PINS

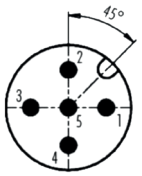

Pinout

1	GND*
2	+Vin
3	CAN-GND*
4	CAN-H
5	CAN-L

* GND and CAN_GND terminals are internally connected to each other and identical in their function

4] ELECTRICAL CONNECTION WIRE CONECTOR

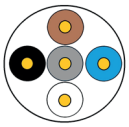

Pinout

Brown	GND*
White	+Vin
Blue	CAN-GND*
Black	CAN-H
Grey	CAN-L

* GND and CAN_GND terminals are internally connected to each other and identical in their function

13 & 39] ELECTRICAL CONNECTION DEUTSCH DT04-6P

	Pinout	Colors
1	GND	Blue
2	+Vin	White
3	n.c.	n.c.
4	n.c.	n.c.
5	CAN-L	Brown
6	CAN-H	Black

20] ELECTRICAL CONNECTION DEUTSCH DT04-4P

Pinout

1	CAN-L
2	CAN-H
3	+Vin
4	GND

31] ELECTRICAL CONNECTION M8 X 5 PINS

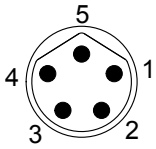

Pinout

	Connector	Accessory
1	CAN-GND*	Brown
2	+Vin	White
3	GND*	Blue
4	CAN H	Black
5	CAN-L	Gray

* GND and CAN_GND terminals are internally connected to each other and identical in their function

30] ELECTRICAL CONNECTION MICROFIT 6 PINS

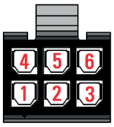

CONNECTOR SIDE

	Pinout	Colors
1	GND	White
2	+Vin	Blue
3	CAN H	Grey
4	CAN-L	Brown
5	n.c	Black
6	n.c.	n.c

TSM SENSORS S.R.L. Registered office:Via Roma 110, 24021 Albino (BG) - ITALY
Operational Headquarter : Via Alcide De Gasperi , 6/8 25030 Zocco d'Erbusco (BS) - ITALY
P.IVA: 04334290162 - C.F: 03757080985 TEL. +39 030 7001376 - info@tsmsensors.com - www.tsmsensors.com

COUNTING DIRECTION (BOTTOM VIEW)

1] CH1 & CH2 = CW

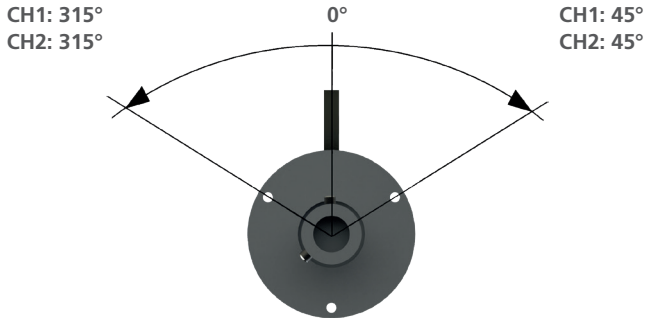

2] CH1 & CH2 = CCW

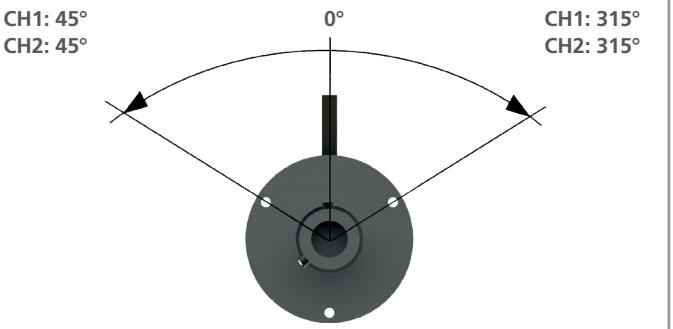

3] CH1 = CW, CH2 = CCW

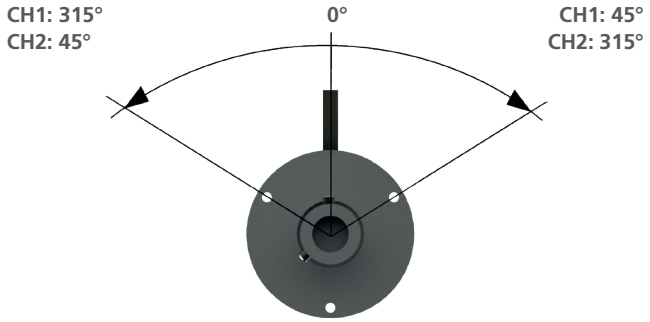

4] CH1 = CCW, CH2 = CW

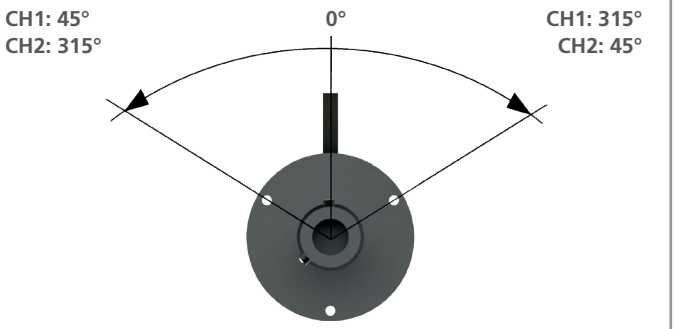

"Zero point is not marked and differs for each unit.
It is recommended to set the zero point by sending the related command once the sensor has been installed on the final application"

MAGNET POSITIONING TOLERANCES

Max radial X - Y misalignment: 1 mm

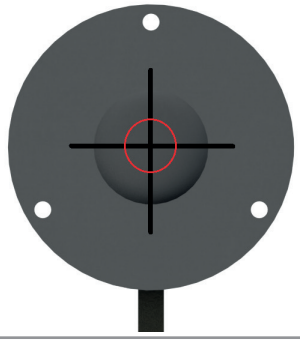

AIR GAP Z: 1 – 8 mm

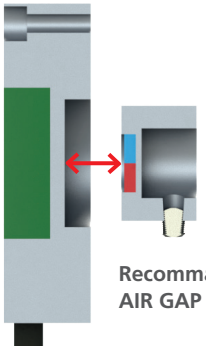

Recommanded: 2mm
AIR GAP Z: 1 – 8 mm

NOTE:
a) Any extra offset or misalignment increases the non-linearity.
b) Each sensor MUST be mounted with its own rotor / screw / magnet included in the package.
c) Magnet should NOT be incorporated in a ferromagnetic housing (holder)
d) Magnet must NOT be installed in close contact with a surface of ferromagnetic material
e) The sensor must be mounted using M3 screws in non-magnetic stainless steel e.g. AISI 316

TSM SENSORS S.R.L. Registered office:Via Roma 110, 24021 Albino (BG) - ITALY
Operational Headquarter : Via Alcide De Gasperi , 6/8 25030 Zocco d'Erbusco (BS) - ITALY
P.IVA: 04334290162 - C.F: 03757080985 TEL. +39 030 7001376 - info@tsmsensors.com - www.tsmsensors.com

MAGNETS DIMENSIONS [mm]

1] Rotor STD

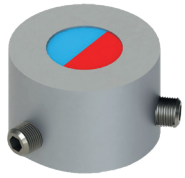

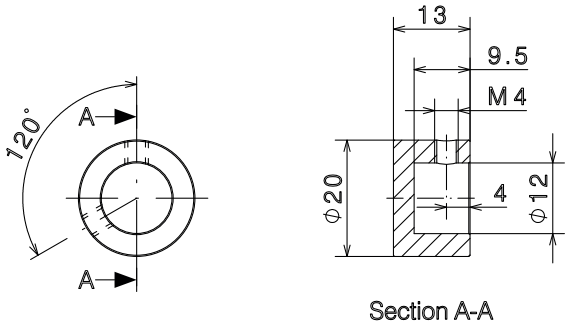

Anodized aluminum

Recommended shaft ø 12 fix threaded x2 pin M4 (included in delivery)

2] Screw magnet "M8, SW13"

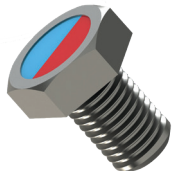

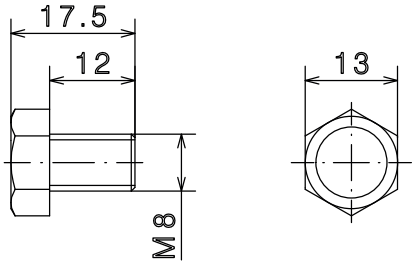

AISI316L

3] Magnet 10 x 2 mm

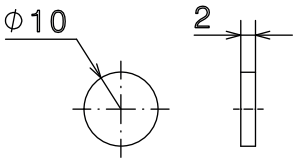

4] Screw magnet "M7, SW11"

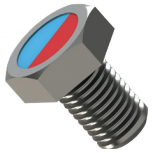

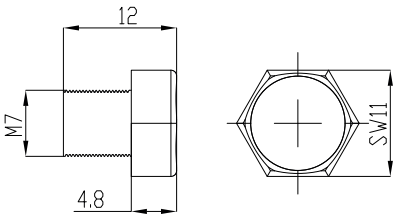

AISI316L

TSM SENSORS S.R.L. Registered office:Via Roma 110, 24021 Albino (BG) - ITALY
Operational Headquarter : Via Alcide De Gasperi , 6/8 25030 Zocco d'Erbusco (BS) - ITALY
P.IVA: 04334290162 - C.F: 03757080985 TEL. +39 030 7001376 - info@tsmsensors.com - www.tsmsensors.com

L.4 - DS0035 R00 RTE200 CANopen

DIMENSIONS [mm]

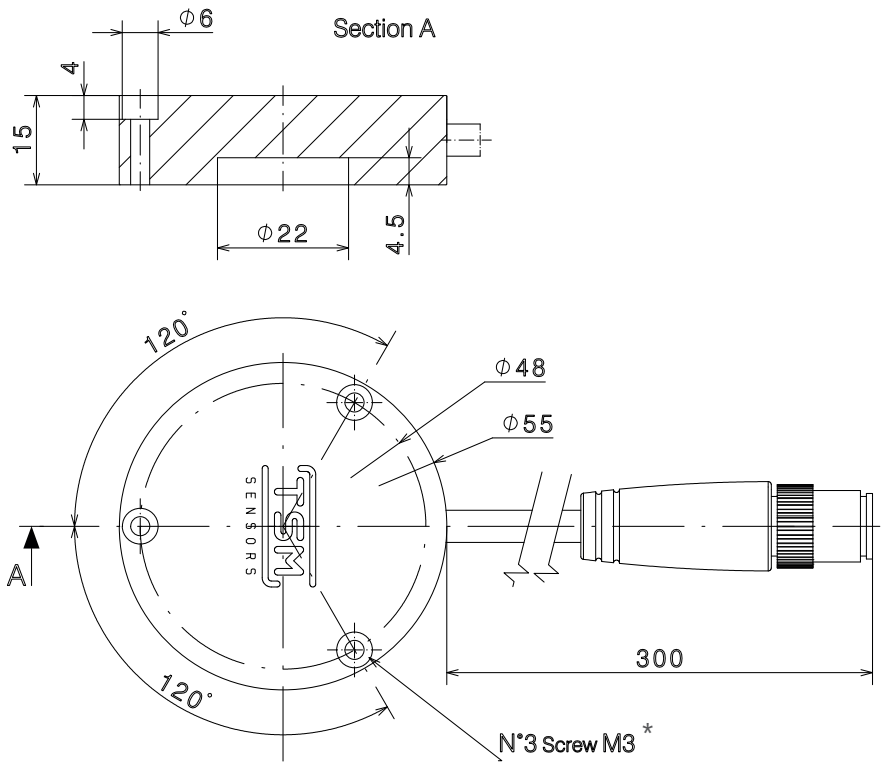

* MAX tightening torque 2.5Nm

TSM SENSORS S.R.L. Registered office:Via Roma 110, 24021 Albino (BG) - ITALY
Operational Headquarter : Via Alcide De Gasperi , 6/8 25030 Zocco d'Erbusco (BS) - ITALY
P.IVA: 04334290162 - C.F: 03757080985 TEL. +39 030 7001376 - info@tsmsensors.com - www.tsmsensors.com