# MAG100 CANopen

## MAGNETOSTRICTIVE SENSOR

Absolute measuring length up to 3 m linear position transducer

L.4 - DS0039 R01 MAG100 CANopen

## CHARACTERISTICS

- Measuring range up to 3 m
- Designed for installation into hydraulic cylinders
- High shock and vibration resistance
- M18x1.5 threaded connection
- Operating pressure up to 350 bar
- Customizable cursor

## ADVANTAGES

- Absolute contactless linear position measurement
- High resolution and linearity
- Unlimited mechanical life
- Rod, nipple and flange in AISI 316
- Easy installation and field replacement
- Position, speed and acceleration measurement

IP67 — High protection level

Shock/vibration resistant

Redundant outputs

Reverse polarity protection

-40...+85 °C — Wide temp. range

3 m — Max. length: 3 m

CANopen output

CANopen Safety

High accuracy

Firmware Upgradable

Directive 2011/65/EU

EU conformity

The company reserves the right to make any kind of design or functional modification at any moment without prior notice.



TSM SENSORS S.R.L. Registered office:Via Roma 110, 24021 Albino (BG) - ITALY
Operational Headquarter : Via Alcide De Gasperi , 6/8 25030 Zocco d'Erbusco (BS) - ITALY
P.IVA: 04334290162 - C.F: 03757080985 TEL. +39 030 7001376 - info@tsmsensors.com - www.tsmsensors.com

# MAG100 CANopen

## MAGNETOSTRICTIVE SENSOR

Absolute measuring length up to 3 m linear position transducer

## PRODUCT DESCRIPTION

MAG100 is a magnetostrictive position transducer with threaded connection, designed for mobile machines which can be installed inside oil-pressure cylinders.

The only external part is the head whose slim profile facilitates installation in confined spaces and allows easy maintenance operations.
Its unique design, plus a wide range of cursor configurations, ensure easy installation and full compatibility with cylinder manufacturer specifications.

The temperature range from -40 to +85°C, the operating pressures up to 350 bar and the high resistance to vibration and shock make the sensor very robust, a fundamental feature in heavy-duty applications.
High performance in terms of transduction of measurement defined as linearity, hysteresis and repeatability.

**Agricultural** machinery

**Construction**

**Earth** moving

**Handling** and **lifting**

L.4 - DS0039 R01 MAG100 CANopen



The company reserves the right to make any kind of design or functional modification at any moment without prior notice.

TSM SENSORS S.R.L. Registered office:Via Roma 110, 24021 Albino (BG) - ITALY
Operational Headquarter : Via Alcide De Gasperi , 6/8 25030 Zocco d'Erbusco (BS) - ITALY
P.IVA: 04334290162 - C.F: 03757080985 TEL. +39 030 7001376 - info@tsmsensors.com - www.tsmsensors.com

## PRODUCT CODE

**ORDER CODE(1)** ▶ M A G 1 0 0 . [a] . [b] . [c] . [d] . [e] . [f] . [g]

**a** Power supply range
- **2** ◂ = 9 ... 30 V DC
- **6** ◂ = 8 ... 36 V DC

**b** Measurement range
- **XXXX** ◂ = mm (steps of 0100 mm)

**c** Output type(2)
- **6** ◂ = CANopen
- **28** ◂ = CANopen with diagnostics
- **43** ◂ = CANopen safety

**d** Connections
- **1** ◂ = Male connector M12, 5-pin PUR cable 30 cm

**e** Cursor type
- **X** ◂ = none
- **0** ◂ = Magnetic cursor 18 x 8 mm - AW2011A anodized
- **1** ◂ = Magnetic cursor 18 x 10 mm - AW2011A anodized

**f** Customization
- **X** ◂ = None
- **?** ◂ = Customization code

**g** Approvals
- **1** ◂ = Standard components(3)
- **2** ◂ = SIL2/PLd

(1) Not all combinations can be ordered. Please contact TSM for confirmation before placing an order.
(2) Redundanted primary measures, acquired by a single logical unit and published on the CANOpen output by one or more PDOs, according to the selected mapping.
(3) MTTFd > 100 years (EN ISO 13849-1) a) b)
a) Standard component. It does not constitute a safety component as defined in the Machinery Directive 2006/42/CE.
b) Every second failure of an electronic component is regarded as a dangerous failure.

The company reserves the right to make any kind of design or functional modification at any moment without prior notice.



TSM SENSORS S.R.L. Registered office:Via Roma 110, 24021 Albino (BG) - ITALY
Operational Headquarter : Via Alcide De Gasperi , 6/8 25030 Zocco d'Erbusco (BS) - ITALY
P.IVA: 04334290162 - C.F: 03757080985 TEL. +39 030 7001376 - info@tsmsensors.com - www.tsmsensors.com

L.4 - DS0039 R01 MAG100 CANopen

# MAG100 CANopen

## MAGNETOSTRICTIVE SENSOR

Absolute measuring length up to 3 m linear position transducer

Top Sensors Manufacture

## TECHNICAL SPECIFICATION

| | |
|---|---|
| **Measuring range** | 0.1…3 m |
| **Magnetostrictive resolution** | 0.1 mm |
| **Magnetostrictive linearity (Ta = 25°C)** | up to 250mm < ± 0.1 mm<br>from 250 to 3000mm ±0.04% FS |
| **Magnetostrictive repeatability (Ta = 25°C)** | ±0.1 mm |
| **Operating pressure** | According to EN 13480-5<br>350 bar (Peak: 500 bar) |
| **Protection class** | IP67 |
| **Temperature range** | -40°C ... +85°C |
| **Temperature coefficient** | ±0.004 % FS/°C |
| **Housing** | Head and rod: stainless steel AISI316 |
| **Rod diameter** | 10 mm |
| **Shock resistance** | acc. to EN 60068-2-27<br>30 G, 11 ms 100 Shocks per axis |
| **Vibration resistance** | acc. to EN 60068-2-6<br>10 ... 150 Hz |

## ELECTRICAL CHARACTERISTICS

| | |
|---|---|
| **Power supply range** | see order code |
| **Startup time** | < 1.5 s |
| **Inrush current** | 1.5A - 2ms @ 12VDC |
| **Current consumption** | 48 mA (12 VDC, w/o load)<br>25 mA (24 VDC, w/o load) |
| **CANopen profile conformity** | CiA DS301 |
| **Interface** | CANopen<br>CANopen Safety |
| **Electromagnetic compatibility** | acc. to EN 61326-1, EN 61326-3-1 |
| **EU conformity** | EMC directive 2014/30/EU<br>RoHS directive 2011/65/EU + 2015/863/EU |

## ELECTRICAL CONNECTION M12 X 5 PINS

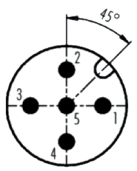


**Pinout**

| | |
|---|---|
| **1** | CAN-GND* |
| **2** | +Vin |
| **3** | GND* |
| **4** | CAN-H |
| **5** | CAN-L |

* GND and CAN_GND terminals are internally connected to each other and identical in their function

## OPERATING PRINCIPLE

The operating principle is based on the magnetostrictive effect. The application of periodic short current pulses in the magnetosctrictive wire generates an induced magnetic field. The interaction of the magnetic cursor, connected to the moving object in the application, with this field generates a momentary torsional strain on the magnetostrictive wire which propagates along it as in a waveguide. When the ultrasonic wave reaches the end of the guide, it is detected by a sensitive element which converts it into an electrical signal. Since the velocity of propagation is known, the linear position is computed by measuring the time-of-flight of the pulse.

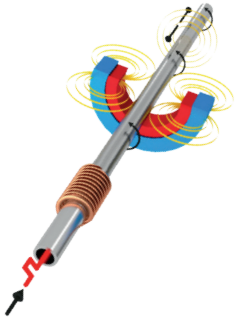





The company reserves the right to make any kind of design or functional modification at any moment without prior notice.

TSM SENSORS S.R.L. Registered office:Via Roma 110, 24021 Albino (BG) - ITALY
Operational Headquarter : Via Alcide De Gasperi , 6/8 25030 Zocco d'Erbusco (BS) - ITALY
P.IVA: 04334290162 - C.F: 03757080985 TEL. +39 030 7001376 - info@tsmsensors.com - www.tsmsensors.com

## CURSOR TYPES

### 1] Magnetic cursor 18 x 10 mm - AW2011 anodized

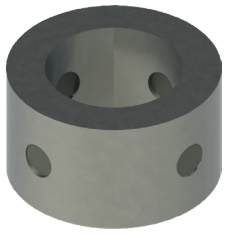

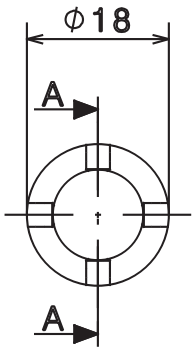


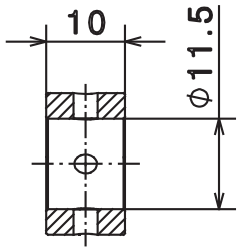


Section A-A

### 2] Magnetic cursor 18 x 8 mm - AW2011 anodized

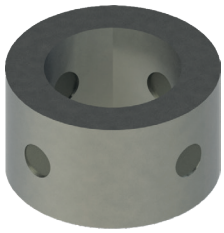

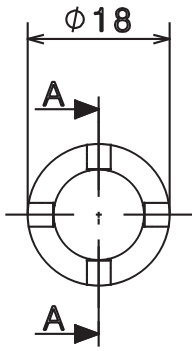


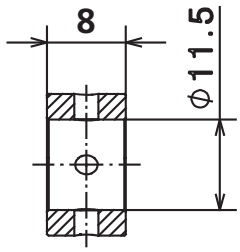


Section A-A




The company reserves the right to make any kind of design or functional modification at any moment without prior notice.





TSM SENSORS S.R.L. Registered office:Via Roma 110, 24021 Albino (BG) - ITALY
Operational Headquarter : Via Alcide De Gasperi , 6/8 25030 Zocco d'Erbusco (BS) - ITALY
P.IVA: 04334290162 - C.F: 03757080985 TEL. +39 030 7001376 - info@tsmsensors.com - www.tsmsensors.com

### DIMENSIONS [mm]

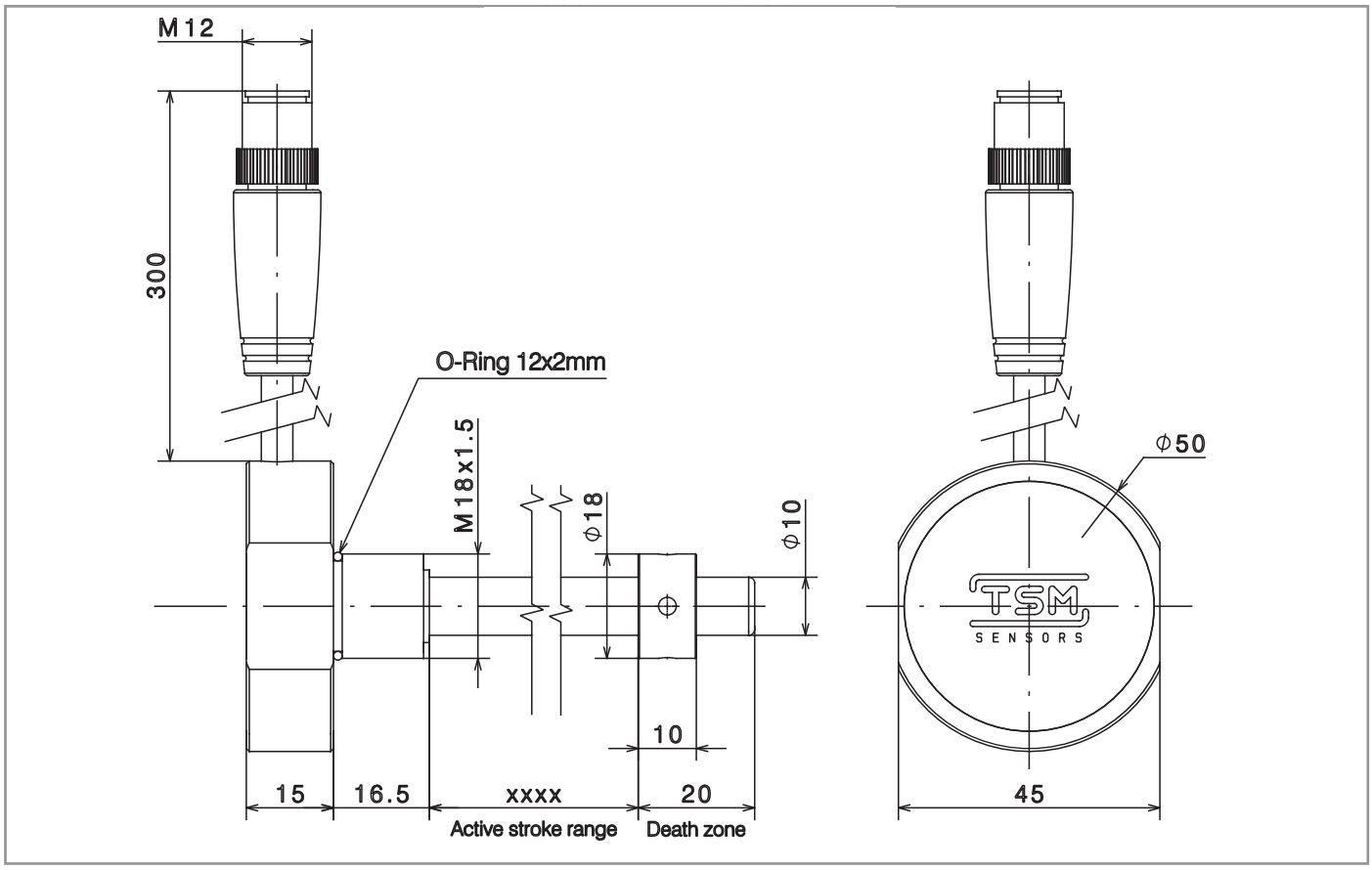


L.4 - DS0039 R01 MAG100 CANopen

**Head seat**

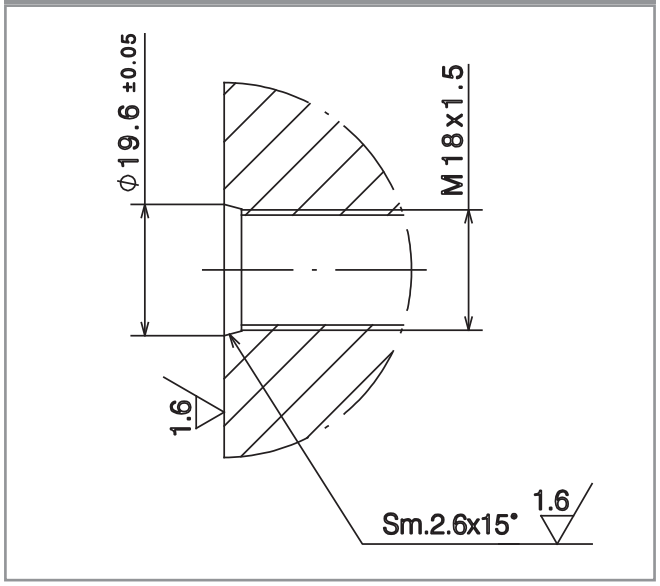


**Magnet seat**

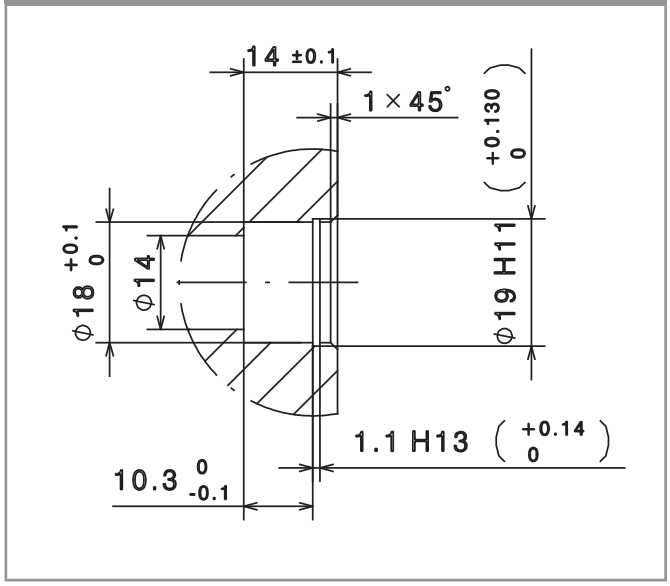


**WARNING:** For installation apply a maximum tightening torque of 60 Nm



The company reserves the right to make any kind of design or functional modification at any moment without prior notice.

TSM SENSORS S.R.L. Registered office:Via Roma 110, 24021 Albino (BG) - ITALY
Operational Headquarter : Via Alcide De Gasperi , 6/8 25030 Zocco d'Erbusco (BS) - ITALY
P.IVA: 04334290162 - C.F: 03757080985 TEL. +39 030 7001376 - info@tsmsensors.com - www.tsmsensors.com